Electrolux PROFESSIONAL

SkyLine ProS Electric Combi Oven 8 trays, 400x600mm Bakery

ITEM #

MODEL #

NAME #

SIS #

AIA #

227652 (ECOE101K2AB)

SkyLine ProS combi boilerless oven with touch screen control, 8 400x600mm, electric, 2 cooking modes (recipe program, manual), automatic cleaning, for bakery/pastry, pitch 80mm

Short Form Specification

Item No.

Combi oven with high resolution full touch screen interface, multilanguage.
- Boilerless steaming function to add and retain moisture.
- OptiFlow air distribution system to achieve maximum performance with 7 fan speed levels.
- SkyClean: Automatic and built-in self cleaning system. 5 automatic cycles (soft, medium, strong, extra strong, rinse-only) and green functions to save energy, water, detergent and rinse aid.
- Cooking modes: Programs (a maximum of 1000 recipes can be stored and organized in 16 different categories); Manual; EcoDelta cooking cycle.
- Special functions: MultiTimer cooking, Plan-n-Save to cut running costs, Make-it-Mine to customize interface, SkyHub to customize homepage, agenda MyPlanner, automatic backup mode to avoid downtime.
- USB port to download HACCP data, programs and settings. Connectivity ready.
- Single sensor core temperature probe.
- Double-glass door with LED lights.
- Stainless steel construction throughout.
- Supplied with n.1 pastry tray rack 400x600 mm, 80 mm pitch.

APPROVAL:

Main Features

- Boilerless steaming function to add and retain moisture for high quality, consistent cooking results.
- Dry hot convection cycle (max 300 °C) ideal for low humidity cooking. Automatic moistener (11 settings) for boiler-less steam generation:-0 = no additional moisture (browning, au gratin, baking, pre-cooked food)-1-2 = low moisture (small portions of meat and fish)-3-4 = medium low moisture (large pieces of meat, reheating, roasted chicken and proving)-5-6 = medium moisture (roasted vegetable and first step of roasted meat & fish)-7-8 = medium-high moisture (stewed vegetables)-9-10 = high moisture (poached meat and jacket potatoes)
- EcoDelta cooking: cooking with food probe maintaining preset temperature difference between the core of the food and the cooking chamber.
- Programs mode: a maximum of 1000 recipes can be stored in the oven's memory, to recreate the exact same recipe at any time. The recipes can be group in 16 different categories to better organize the menu. 16-step cooking programs also available.
- MultiTimer function to manage up to 20 different cooking cycles at the same time, improving flexibility and ensuring excellent cooking results. Can be saved up to 200 MultiTimer programs.
- Fan with 7 speed levels from 300 to 1500 RPM and reverse rotation for optimal evenness. Fan stops in less than 5 seconds when door is opened.
- Single sensor core temperature probe included.
- Pictures upload for full customization of cooking cycles.
- Automatic fast cool down and pre-heat function.
- Different chemical options available: solid (phosphate-free), liquid (requires optional accessory).
- GreaseOut: predisposed for integrated grease drain and collection for safer operation (dedicated base as optional accessory).
- USB port to download HACCP data, share cooking programs and configurations. USB port also allows to plug-in sous-vide probe (optional accessory).
- Back-up mode with self-diagnosis is automatically activated if a failure occurs to avoid downtime.
- Capacity: 8 GN 1/1 400x600mm trays.
- OptiFlow air distribution system to achieve maximum performance in chilling/heating eveness and temperature control thanks to a special design of the chamber.

Construction

- Double thermo-glazed door with open frame construction, for cool outside door panel. Swing hinged easy-release inner glass on door for easy cleaning.
- Seamless hygienic internal chamber with all rounded corners for easy cleaning.
- 304 AISI stainless steel construction throughout.
- Front access to control board for easy service.
- IPX 5 spray water protection certification for easy cleaning.

- Supplied with n.1 pastry tray rack 400x600 mm, 80 mm pitch.

User Interface & Data Management

- High resolution full touch screen interface (translated in more than 30 languages) - color-blind friendly panel.
- Make-it-mine feature to allow full personalization or locking of the user interface.
- SkyHub lets the user group the favorite functions in the homepage for immediate access.
- MyPlanner works as an agenda where the user can plan the daily work and receive personalized alerts for each task.
- Connectivity ready for real time access to connected appliances from remote and HACCP monitoring (requires optional accessory).
- Trainings and guidances supporting materials easily accessible by scanning QR-Code with any mobile device.
- Automatic consumption visualization at the end of the cycle.
- Connectivity ready for real time access to connected appliances from remote and data monitoring (requires optional accessory – contact the Company for more details).

Sustainability

- Human centered design with 4-star certification for ergonomics and usability.
- Wing-shaped handle with ergonomic design and hands-free opening with the elbow, making managing trays simpler (Registered Design at EPO).
- Reduced power function for customized slow cooking cycles.
- SkyClean: Automatic and built-in self cleaning system. 5 automatic cycles (soft, medium, strong, extra strong, rinse-only) and green functions to save energy, water, detergent and rinse aid. Also programmable with delayed start.
- Plan-n-Save function organizes the cooking sequence of the chosen cycles optimizing the work in the kitchen from a time and energy efficiency point of view.

Included Accessories

- 1 of Bakery/pastry rack kit for 10 GN 1/1 oven with 8 racks 400x600mm and 80mm pitch — PNC 922656

Optional Accessories

- Water softener with cartridge and flow meter (high steam usage) — PNC 920003 ❑
- Water softener with salt for ovens with automatic regeneration of resin — PNC 921305 ❑
- Wheel kit for 6 & 10 GN 1/1 and 2/1 GN oven base (not for the disassembled one) — PNC 922003 ❑
- Pair of AISI 304 stainless steel grids, GN 1/1 — PNC 922017 ❑
- Pair of grids for whole chicken (8 per grid - 1,2kg each), GN 1/1 — PNC 922036 ❑
- AISI 304 stainless steel grid, GN 1/1 — PNC 922062 ❑
- Grid for whole chicken (4 per grid - 1,2kg each), GN 1/2 — PNC 922086 ❑
- External side spray unit (needs to be mounted outside and includes support to be mounted on the oven) — PNC 922171 ❑
- Baking tray for 5 baguettes in perforated aluminum with silicon coating, 400x600x38mm — PNC 922189 ❑
- Baking tray with 4 edges in perforated aluminum, 400x600x20mm — PNC 922190 ❑
- Baking tray with 4 edges in aluminum, 400x600x20mm — PNC 922191 ❑
- Pair of frying baskets — PNC 922239 ❑
- AISI 304 stainless steel bakery/pastry grid 400x600mm — PNC 922264 ❑
- Double-step door opening kit — PNC 922265 ❑
- Grid for whole chicken (8 per grid - 1,2kg each), GN 1/1 — PNC 922266 ❑
- USB probe for sous-vide cooking — PNC 922281 ❑
- Grease collection tray, GN 1/1, H=100 mm — PNC 922321 ❑
- Kit universal skewer rack and 4 long skewers for Lenghtwise ovens — PNC 922324 ❑
- Universal skewer rack — PNC 922326 ❑
- 4 long skewers — PNC 922327 ❑
- Multipurpose hook — PNC 922348 ❑
- 4 flanged feet for 6 & 10 GN , 2", 100-130mm — PNC 922351 ❑
- Grid for whole duck (8 per grid - 1,8kg each), GN 1/1 — PNC 922362 ❑
- Thermal cover for 10 GN 1/1 oven and blast chiller freezer — PNC 922364 ❑
- Tray support for 6 & 10 GN 1/1 disassembled open base — PNC 922382 ❑
- Wall mounted detergent tank holder — PNC 922386 ❑
- - NOT TRANSLATED - — PNC 922390 ❑
- Tray rack with wheels, 10 GN 1/1, 65mm pitch (included) — PNC 922601 ❑
- Tray rack with wheels 8 GN 1/1, 80mm pitch — PNC 922602 ❑
- Bakery/pastry tray rack with wheels 400x600mm for 10 GN 1/1 oven and blast chiller freezer, 80mm pitch (8 runners) — PNC 922608 ❑
- Slide-in rack with handle for 6 & 10 GN 1/1 oven — PNC 922610 ❑
- Open base with tray support for 6 & 10 GN 1/1 oven — PNC 922612 ❑
- Cupboard base with tray support for 6 & 10 GN 1/1 oven — PNC 922614 ❑
- Hot cupboard base with tray support for 6 & 10 GN 1/1 oven holding GN 1/1 or400x600mm — PNC 922615 ❑
- External connection kit for detergent and rinse aid — PNC 922618 ❑
- Grease collection kit for GN 1/1-2/1 cupboard base (trolley with 2 tanks, open/close device and drain) — PNC 922619 ❑
- Stacking kit for electric 6+6 GN 1/1 ovens or electric 6+10 GN 1/1 GN ovens — PNC 922620 ❑
- Trolley for slide-in rack for 6 & 10 GN 1/1 oven and blast chiller freezer — PNC 922626 ❑
- Trolley for mobile rack for 6 GN 1/1 on 6 or 10 GN 1/1 ovens — PNC 922630 ❑
- Stainless steel drain kit for 6 & 10 GN oven, dia=50mm — PNC 922636 ❑
- Plastic drain kit for 6 &10 GN oven, dia=50mm — PNC 922637 ❑
- Trolley with 2 tanks for grease collection — PNC 922638 ❑
- Grease collection kit for open base (2 tanks, open/close device and drain) — PNC 922639 ❑
- Wall support for 10 GN 1/1 oven — PNC 922645 ❑

The company reserves the right to make modifications to the products without prior notice. All information correct at time of printing.

2024.10.08

• Banquet rack with wheels holding 30 plates for 10 GN 1/1 oven and blast chiller freezer, 65mm pitch	PNC 922648	❑
• Banquet rack with wheels holding 23 plates for 10 GN 1/1 oven and blast chiller freezer, 85mm pitch	PNC 922649	❑
• Dehydration tray, GN 1/1, H=20mm	PNC 922651	❑
• Flat dehydration tray, GN 1/1	PNC 922652	❑
• Open base for 6 & 10 GN 1/1 oven, disassembled	PNC 922653	❑
• Bakery/pastry rack kit for 10 GN 1/1 oven with 8 racks 400x600mm and 80mm pitch	PNC 922656	❑
• Heat shield for stacked ovens 6 GN 1/1 on 10 GN 1/1	PNC 922661	❑
• Heat shield for 10 GN 1/1 oven	PNC 922663	❑
• Fixed tray rack for 10 GN 1/1 and 400x600mm grids	PNC 922685	❑
• Kit to fix oven to the wall	PNC 922687	❑
• Tray support for 6 & 10 GN 1/1 open base	PNC 922690	❑
• 4 adjustable feet with black cover for 6 & 10 GN ovens, 100-115mm	PNC 922693	❑
• Reinforced tray rack with wheels, lowest support dedicated to a grease collection tray for 10 GN 1/1 oven, 64mm pitch	PNC 922694	❑
• Detergent tank holder for open base	PNC 922699	❑
• Bakery/pastry runners 400x600mm for 6 & 10 GN 1/1 oven base	PNC 922702	❑
• Wheels for stacked ovens	PNC 922704	❑
• Spit for lamb or suckling pig (up to 12kg) for GN 1/1 ovens	PNC 922709	❑
• Mesh grilling grid	PNC 922713	❑
• Probe holder for liquids	PNC 922714	❑
• Odourless hood with fan for 6 & 10 GN 1/1 electric ovens	PNC 922718	❑
• Odourless hood with fan for 6+6 or 6+10 GN 1/1 electric ovens	PNC 922722	❑
• Condensation hood with fan for 6 & 10 GN 1/1 electric oven	PNC 922723	❑
• Condensation hood with fan for stacking 6+6 or 6+10 GN 1/1 electric ovens	PNC 922727	❑
• Exhaust hood with fan for 6 & 10 GN 1/1 ovens	PNC 922728	❑
• Exhaust hood with fan for stacking 6+6 or 6+10 GN 1/1 ovens	PNC 922732	❑
• Exhaust hood without fan for 6&10 1/1GN ovens	PNC 922733	❑
• Exhaust hood without fan for stacking 6+6 or 6+10 GN 1/1 ovens	PNC 922737	❑
• Fixed tray rack, 8 GN 1/1, 85mm pitch	PNC 922741	❑
• Fixed tray rack, 8 GN 2/1, 85mm pitch	PNC 922742	❑
• 4 high adjustable feet for 6 & 10 GN ovens, 230-290mm	PNC 922745	❑
• Tray for traditional static cooking, H=100mm	PNC 922746	❑
• Double-face griddle, one side ribbed and one side smooth, 400x600mm	PNC 922747	❑
• - NOT TRANSLATED -	PNC 922752	❑
• - NOT TRANSLATED -	PNC 922773	❑
• - NOT TRANSLATED -	PNC 922774	❑
• - NOT TRANSLATED -	PNC 922776	❑
• Non-stick universal pan, GN 1/1, H=20mm	PNC 925000	❑
• Non-stick universal pan, GN 1/ 1, H=40mm	PNC 925001	❑
• Non-stick universal pan, GN 1/1, H=60mm	PNC 925002	❑
• Double-face griddle, one side ribbed and one side smooth, GN 1/1	PNC 925003	❑
• Aluminum grill, GN 1/1	PNC 925004	❑
• Frying pan for 8 eggs, pancakes, hamburgers, GN 1/1	PNC 925005	❑
• Flat baking tray with 2 edges, GN 1/1	PNC 925006	❑
• Baking tray for 4 baguettes, GN 1/1	PNC 925007	❑
• Potato baker for 28 potatoes, GN 1/1	PNC 925008	❑
• Non-stick universal pan, GN 1/2, H=20mm	PNC 925009	❑
• Non-stick universal pan, GN 1/2, H=40mm	PNC 925010	❑
• Non-stick universal pan, GN 1/2, H=60mm	PNC 925011	❑
• Compatibility kit for installation on previous base GN 1/1	PNC 930217	❑

The company reserves the right to make modifications to the products without prior notice. All information correct at time of printing.

SkyLine ProS
Electric Combi Oven 8 trays, 400x600mm Bakery

Front

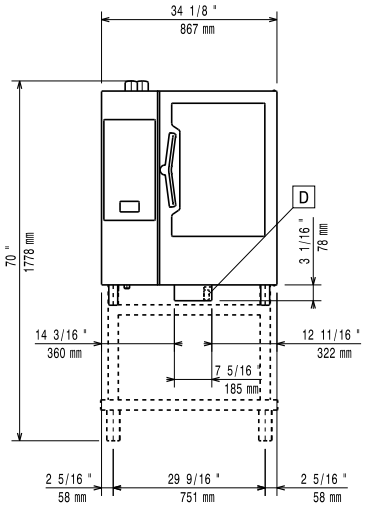

Side

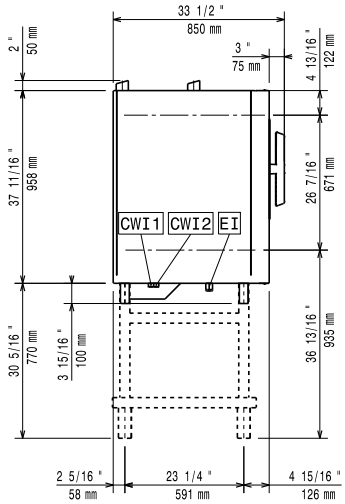

CWI1 = Cold Water inlet 1
CWI2 = Cold Water Inlet 2
D = Drain
DO = Overflow drain pipe
EI = Electrical inlet (power)

Top

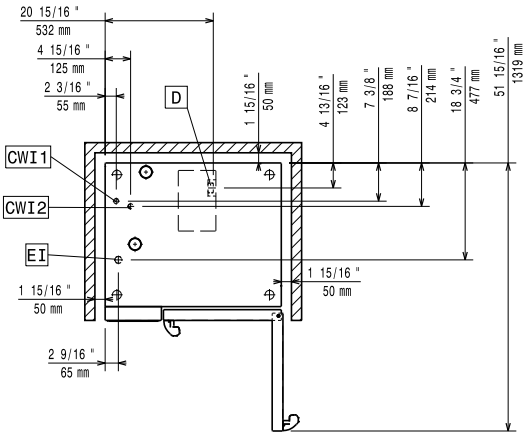

Electric

Supply voltage:	
227652 (ECOE101K2AB)	380-415 V/3N ph/50-60 Hz
Electrical power, default:	19 kW
Electrical power max.:	20.3 kW
Circuit breaker required	

Water:

Water inlet "FCW" connection:	3/4"
Pressure, bar min/max:	1-6 bar
Drain "D":	50mm
Max inlet water supply temperature:	30 °C
Hardness:	5 °fH / 2.8 °dH
Chlorides:	<10 ppm
Conductivity:	>50 µS/cm

Electrolux Professional recommends the use of treated water, based on testing of specific water conditions.

Please refer to user manual for detailed water quality information.

Installation:

Clearance:	Clearance: 5 cm rear and right hand sides.
Suggested clearance for service access:	50 cm left hand side.

Capacity:

GN:	8 - 400x600
Max load capacity:	45 kg

Key Information:

Door hinges:	
External dimensions, Width:	867 mm
External dimensions, Depth:	775 mm
External dimensions, Height:	1058 mm
Net weight:	130 kg
Shipping weight:	150 kg
Shipping volume:	1.11 m³

ISO Certificates

ISO Standards:	04

The company reserves the right to make modifications to the products without prior notice. All information correct at time of printing.